EOS AM-1
Spacecraft Operations

Ray Talipsky
Spacecraft Operations Engineering
Lockheed Martin Missiles and Space
Valley Forge, PA
rtalip@eos.vf.mmc.com

Spacecraft Modes

NOMINAL

	IN	OUT
LAUNCH MODE		
Pre- Launch Launch / Ascent	Ground Command	Ground Command
DELTA - V MODE		
Preparing to *or* firing Attitude Control / Delta V thrusters	Ground Command	Ground Command
SCIENCE MODE		
Spacecraft bus fully configured to support science data collection and transmission via Ku band to TDRSS	Ground Command	Ground Command
CONTINGENCY		
SURVIVAL MODE		
Power critical / minimal power configuration essential spacecraft functions	FDIR Ground Command	Ground Command
Loads shed		
SAFE HOLD MODE		
Attitude Control Electronics controlling SC attitude SCC may or may not be operational	FDIR Ground Command	Ground Command

RT2

Nominal Operation

TDRSS

2 to 3 8 to 12 min contacts per orbit

SSA 16Kbps HK telemetry 10Kbps command

KSA 150Mbps SSR playback

Direct X Band

as scheduled (ATC load)

Direct Broadcast

Direct Broadcast / Direct Down Link

Spacecraft Subsystems

GN&C - Earth Pointing Star Trackers Reaction Wheels

Power - Daylight(charge/shunt) Night (discharge)

C&DH - SCC control SSR science record

EOS - AM 1 TYPICAL SCIENCE ORBIT

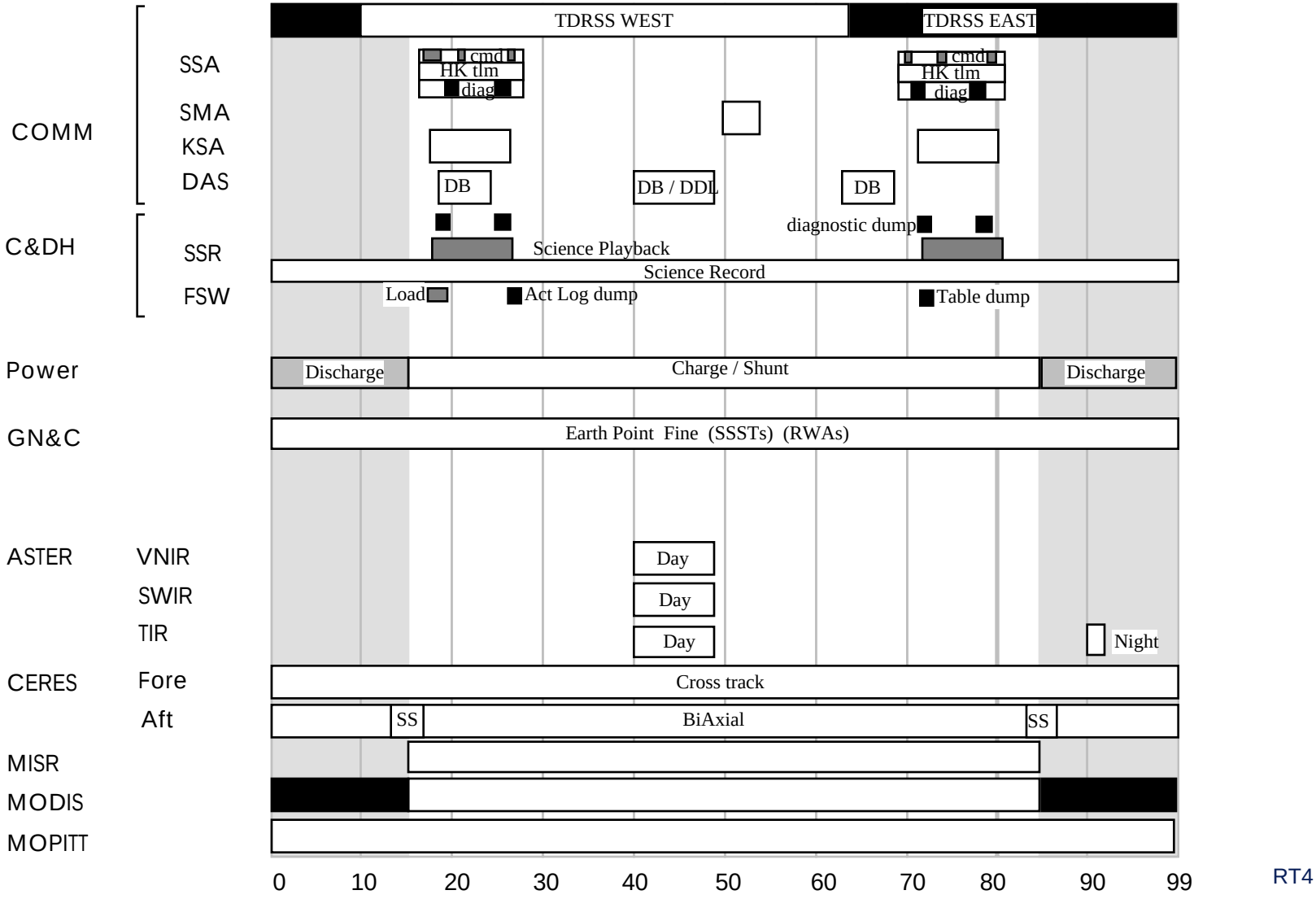

RT4

INSTRUMENT OPERATIONS

MISR

Instrument operates continuously

- Science Mode
  - Global Mode
  - Local Configuration (as req)
  - Engineering Configuration (dark side)
  - Calibration Configuration
    - Over poles (~13 min each once per month)
    - On dark side (~3 min once per month)

Command Requirements

- Instrument Computer
  - Memory load after power ON
- SCC
  - Stored command used to execute activities within 1 day window
  - TMONs (3)

MOPITT

Instrument operates continuously

- Science Mode (day & night)
- Calibration
  - Short Calibration with normal scan
  - Long Calibration (once/month)

Command Requirements

- Instrument Computer
  - loads as required
- SCC
  - Minimal stored command usage
  - TMONs (6)

ASTER (VNIR, SWIR, TIR)

operates limited time (day & night)

- V/S/T Observation Mode
  - preparation (~6.5 min)
  - observation (2 - 16 min)
  - stereo (1 min)
  - standby (40 sec)
- Other Science Modes (e.g,)
  - TIR (<21 min , night)
  - divided V/S/T (<19.5 min)
  - divided S/T (<25 min)
  - VNIR complete stereo (<18 min)
- Pointing Mode for VNIR & SWIR (part of obsv mode for TIR)
- Calibration Mode
  - every 17 days VNIR & SWIR (daytime)
  - every 17 days TIR long cal (nighttime)

Command Requirements

- SCC
  - Activity, instrument operations & control CMDs/sequences all stored in SCC
    - Loaded once per day
    - Estimated SCC commands
      - 1050 ATC (under review)
      - 28 RTCS
  - TMONs (7)

CERES

Both Instruments operates continuously

- Cross track operating mode
  - continuous scan day & night
  - periodic (~2 weeks) calibration
- BiAxial operation
  - continuous scan, interupted twice per orbit with sun-avoidance "short scan"
  - periodic (~2 weeks) calibration

Command Requirements

- Instrument Computer
  - loads as required
- SCC
  - Short scan start/stop commands (loaded once per day)
  - TMONs (15)

MODIS

Instrument operates continuously

- Science Mode
  - All Bands during day (50% of orbit)
    Bands 20 - 36 during night (50% of orbit)
- Calibration
  - 17 internal cal activities as req using 3 targets and electronics changes (BB, SRCA, SD, ECAL)

Command Requirements

- Instrument Computer
  - loads as required
- SCC
  - Daily command load
  - TMONs (1)(TBR)

RT5

COMMAND EXECUTION VERIFICATION

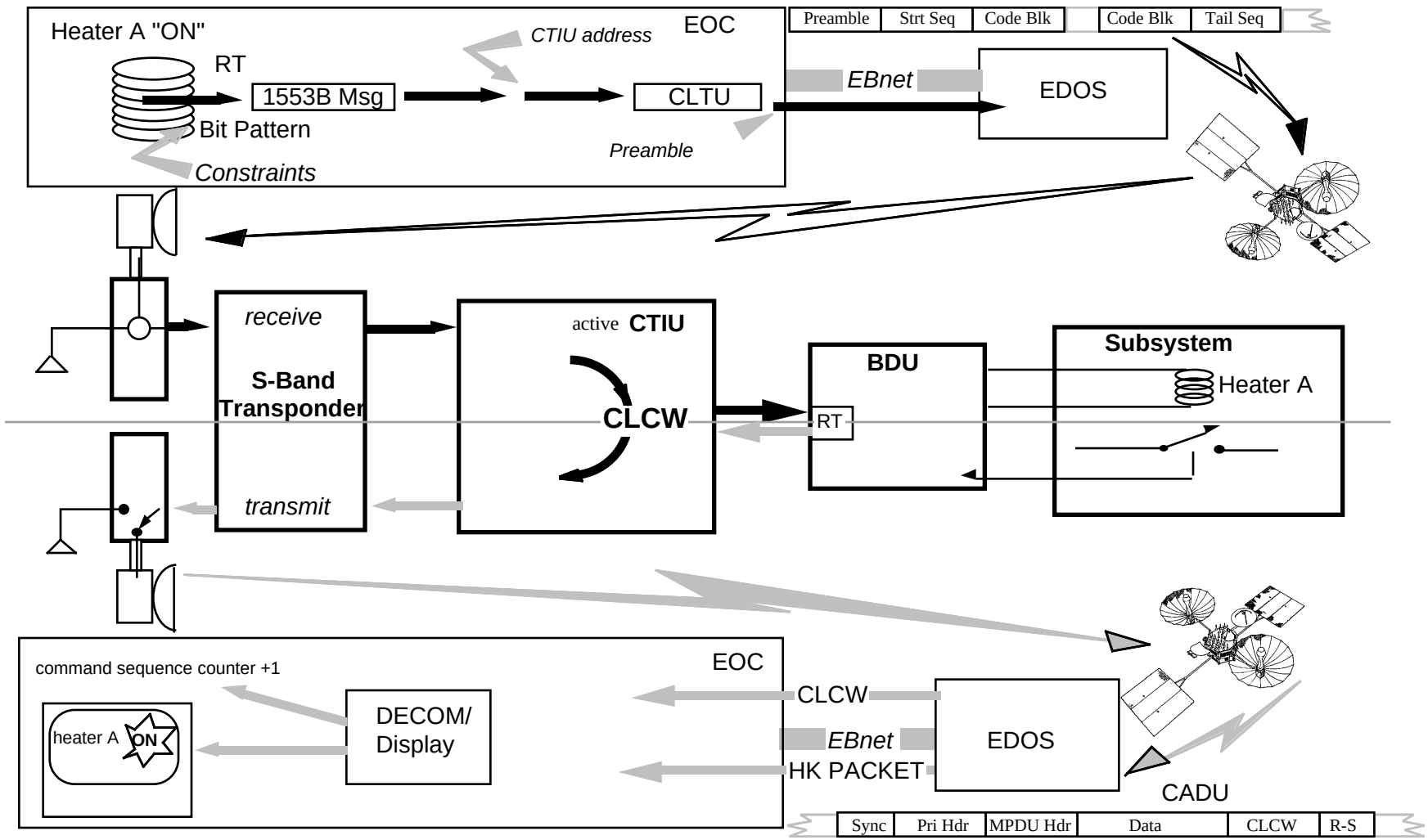

Command Validation - CCSDS **Command Execution Verification - end item telemetry**

RT6

SSR FUNCTIONS & FEATURES

- **Low Power**
- **Science Data Record**
  - **overwrite (ena / disable)**
- **Science Data Playback**
- **Science Data Replay**

- **HK Record**
- **HK Playback (256kbps / 512 kbps)**

- **Memory Configuration**
  - Default
    - Add / Delete Supersets
  - Memory Power Control
- **Built in Test**
- **Interface control**

VCID ---> Channel (buffer) sort map hard wired

- 5 Science Channels (buffers) (by VCID)
- 1 Trash buffer (undesignated VCIDs)
- Fill CADUs not stored
- Spare memory
- Resizable buffers
- Overwrite protection (commandable)
- Record counter (# of EDUs / EDU Blocks)
  Playback counter (# of EDUs/ EDU Blocks)
  Start of playback pointer
- 5 old EDUs backup each Science buffer PB

Recommended Buffer sizing

Buffer	Supersets	Size *Gigibits*
HK	1	1.46
Trash	1	1.46
LRS	1	1.46
CERES		
MOPITT		
HK		
Ancillary		
MISR	16	23.40
MODIS	29	42.41
ASTER	70	102.36
		172.55

Buffer Designation

Trash	0	0000
LRS	1	0001
MISR	2	0010
MODIS	3	0011
ASTER	4	0100

Recommended PB Order

MODIS
MISR
LRS
ASTER

SOLID STATE RECORDER BUFFERS

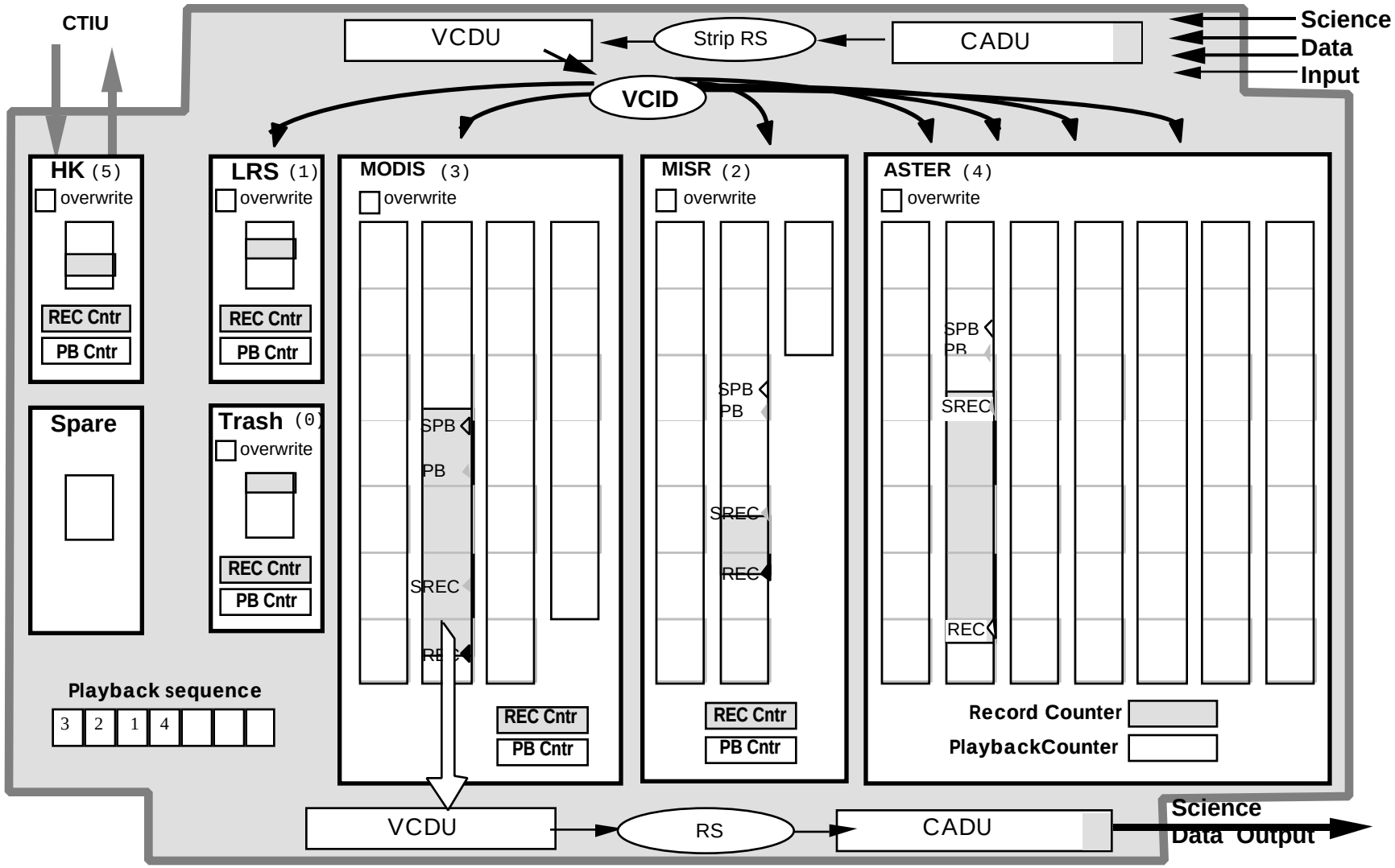

RT8

DAS (X-Band) Operations

DB Schedule
DDL Schedule ----------> **Daily stored command load**

Direct Broadcast (DB)	**continuous MODIS data (13.125 mbps)** **X Band I & Q channel**
Configuration change via stored commands @ start of ASTER active data session Direct Broadcast / Direct DownLink (DB / DDL)	**MODIS data (13.125 mbps) I channel** **ASTER data (105mbps) Q channel**
Configuration change via stored commands @ end of ASTER active data session Direct Broadcast (DB)	**continuous MODIS data (13.125 mbps)** **X Band I & Q channel**
Configuration change via stored commands @ DSN interference site X Band SSPA OFF	
Configuration change via stored commands @ clear of DSN interference site X Band SSPA ON	**continuous MODIS data (13.125 mbps)** **X Band I & Q channel**

Direct Downlink X Band switching scheduled via FOT planned Stored Commands

Solar Array Sun Tracking

Array Drive Electronics (ADE) Operations

- **NORMAL**

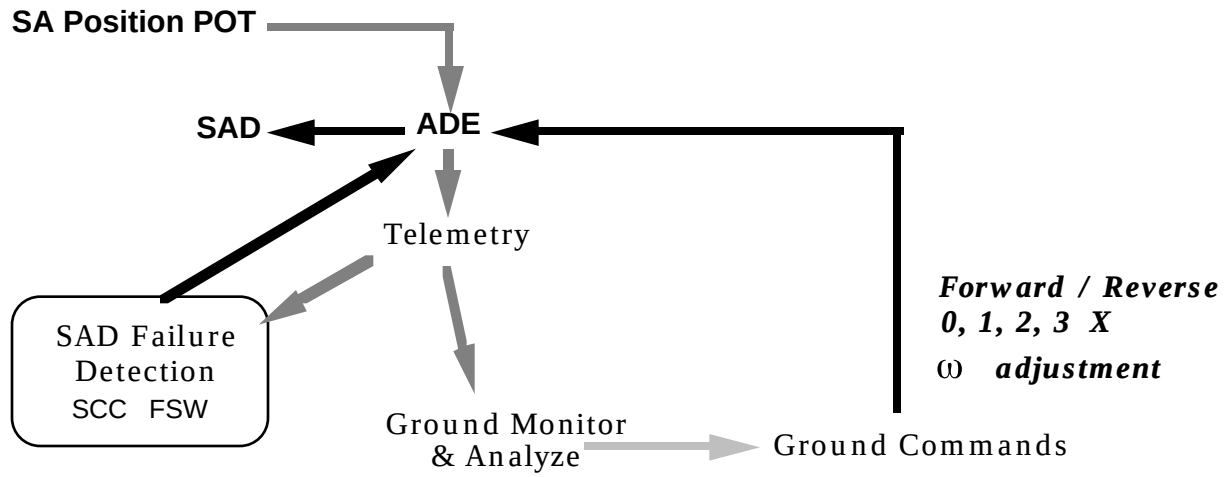

- **SAFE HOLD**
  - Earth Pointing

    ADE <------ CSS
    0, 1, 2 X
  - Sun Pointing

    SA driven at 3X to index position and stopped
    signal ACE (@ index)

Flight Operations monitor SAD ADE Telemetry
Monitor tracking error -- compute required ω
Command updated ω

FSW Operations

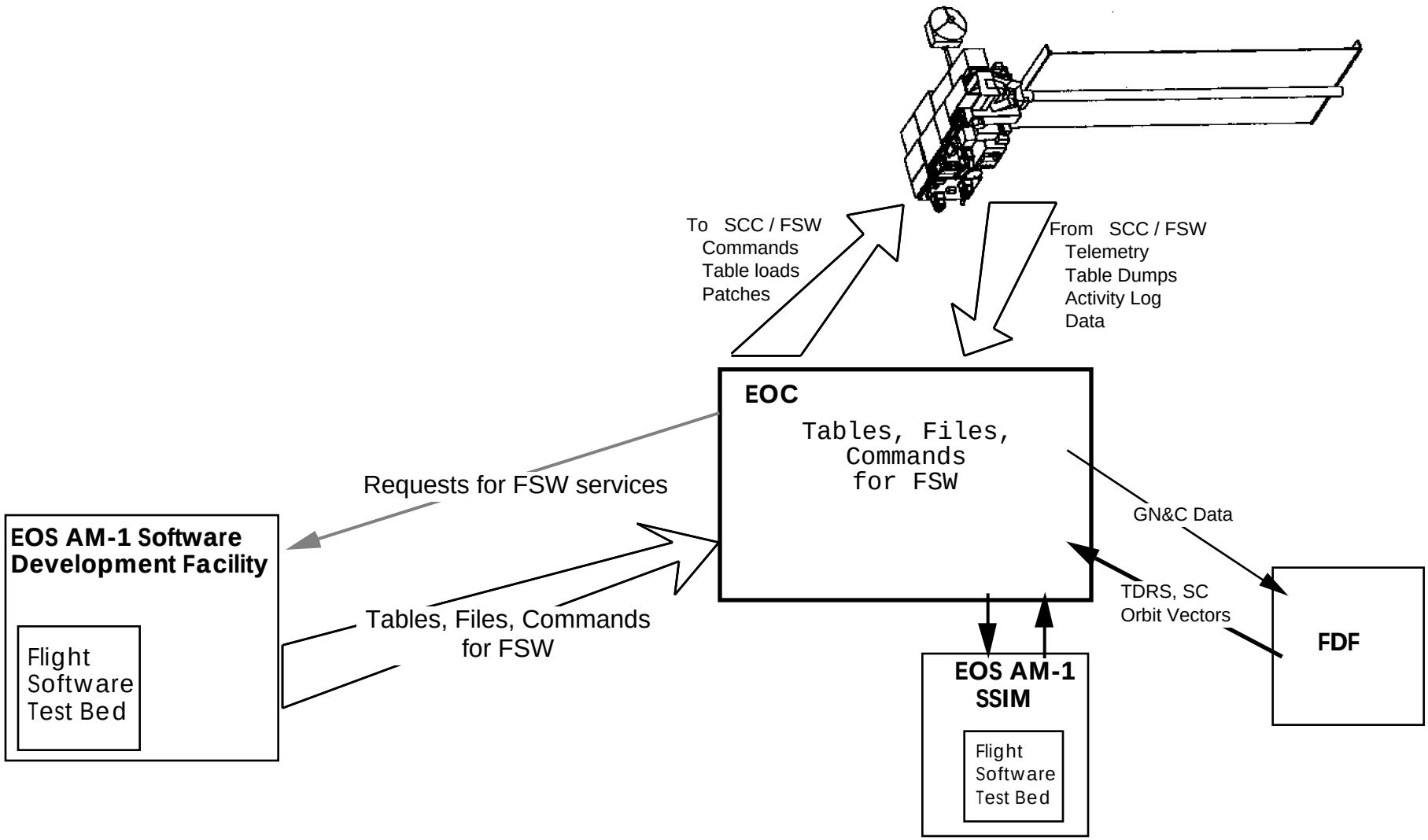

Spacecraft Processors

Loadable Spacecraft Processors

Command and Telemetry Interface Unit (CTIU 1 CTIU 2)

Bus Utilization Table

Code Patch

Spacecraft Control Computer (SCC 1 SCC 2)

Tables

Code Patch

Solid State Star Tracker (SSST 1 SSST 2)

Calibration Table

Code Patch

Instrument Micro Processors

MODIS **CERES F** **MOPITT**
MISR **CERES A**

Tables

Code Patch

SCC / FSW Operations

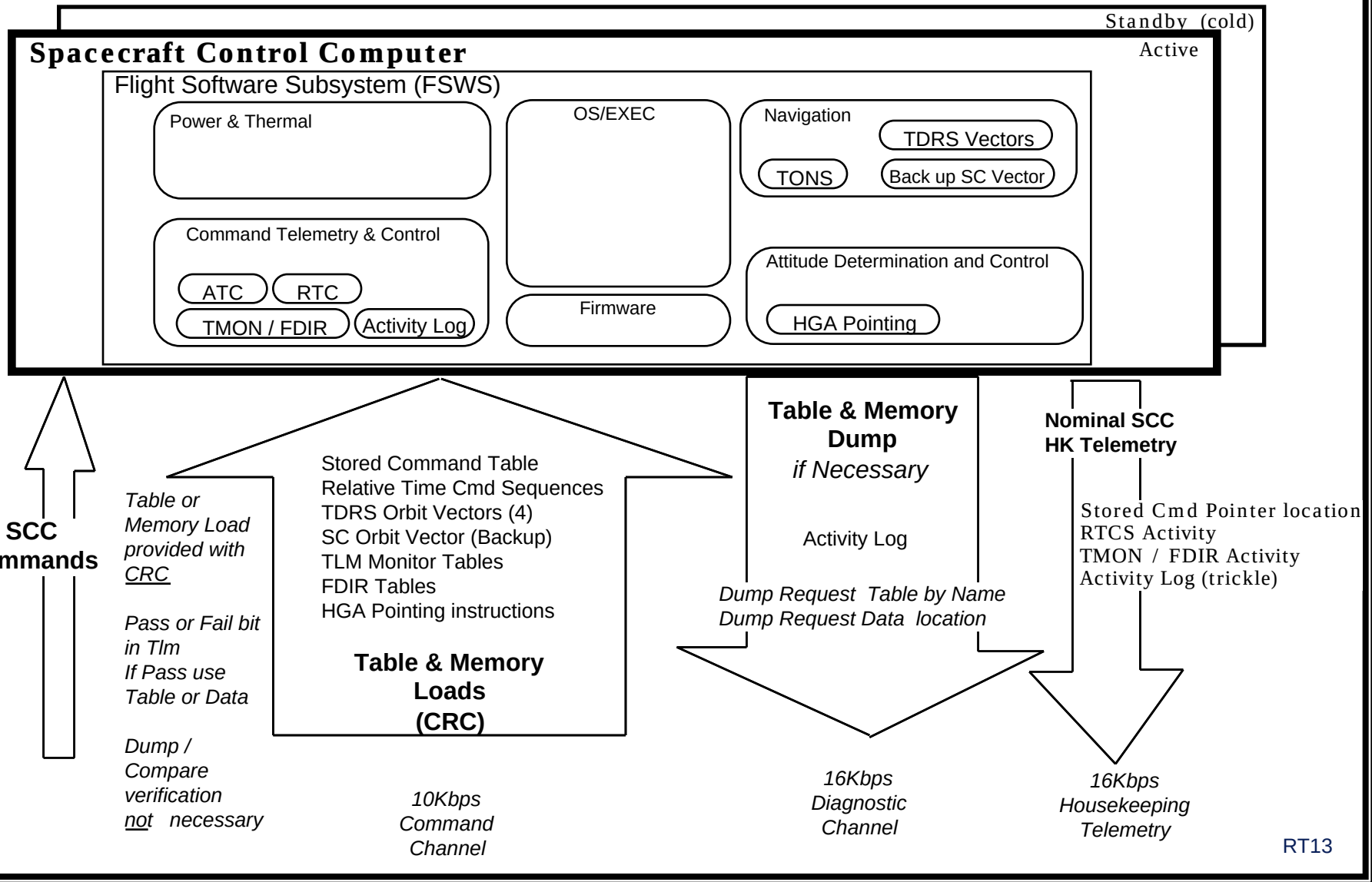

Stored Command Load Process

COMMANDS

Single commands effect discrete functions in FSW

TABLE LOADS

Load table xxx *FSW knows table location*

Load table xxx Start @ word yyy # of words zzz

MEMORY LOADS

Load at address xxxxx # of words zzz

LOAD VERIFICATION

CRC (up to 4k) for load integrity

CRC over table or section of memory for load integrity

Dump Table

Dump Memory

Data ID in dump header

Example Stored Command Load

COMMAND	TLM Resp
Load 4k section	CRC "OK"
Load 4k section	CRC "OK"
Load 4k section	CRC "OK"
CRC Check entire load	CRC xxxxxxx

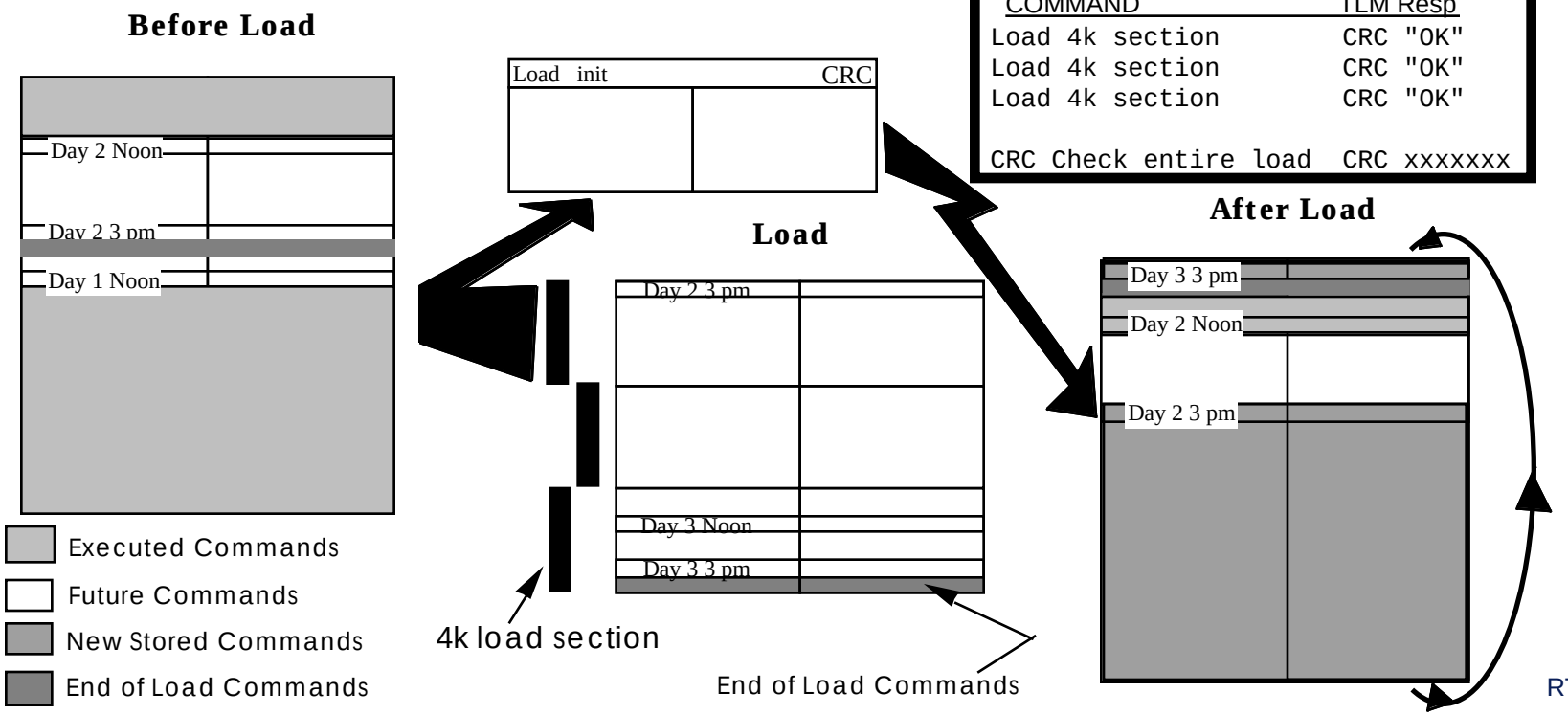

FSW Telemetry Monitor (TMON)

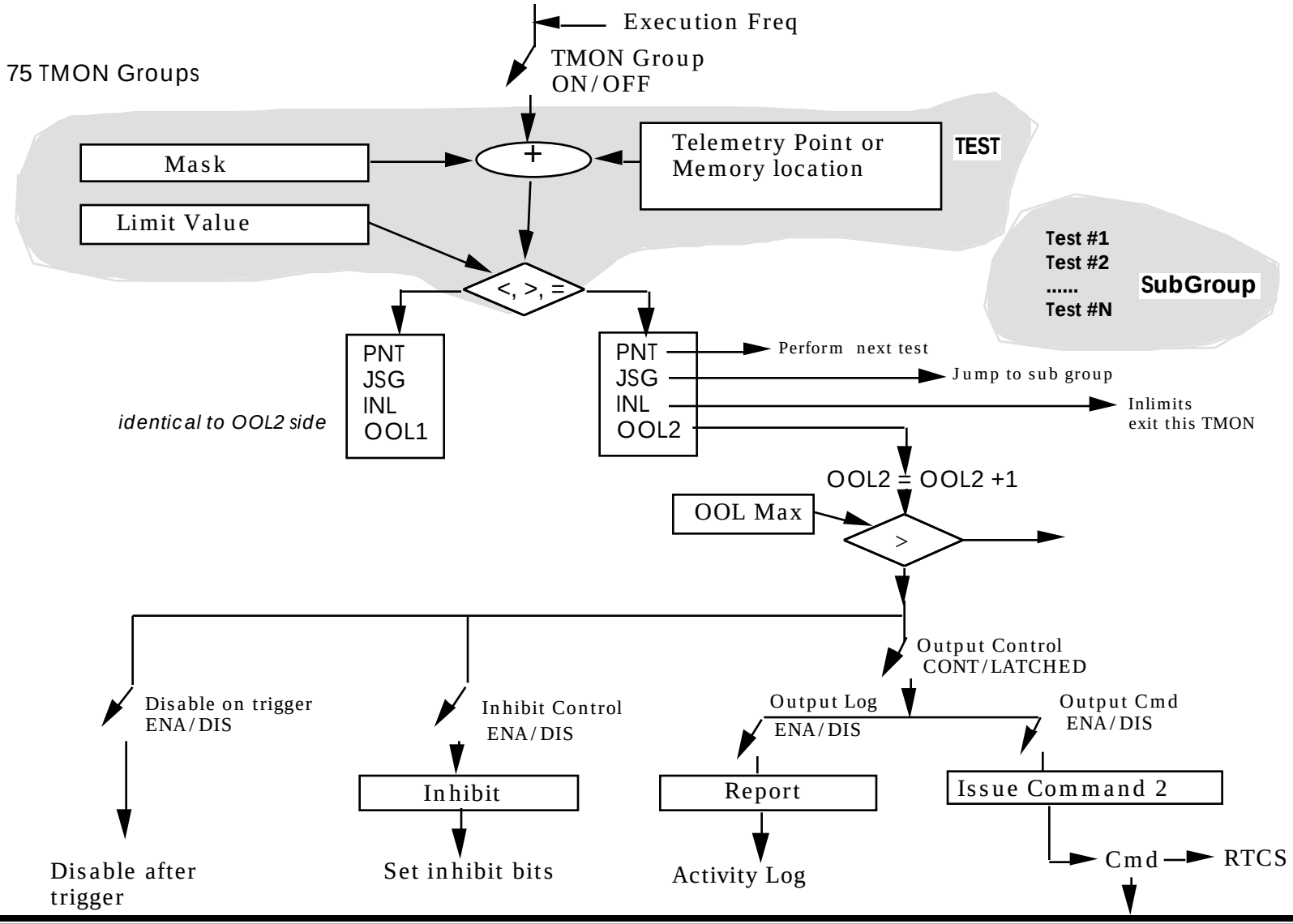

FSW control of High Gain Antenna Pointing

NOMINAL
track TDRS (east)
slew
track TDRS (west)
slew

ALTERNATE
track TDRS - STOP
track TDRS - PARK

HGA Events
Track TDRSS West/East
SSA contact
KSA contact
SMA (two way)
SMA (fwd only)
Slew
to selected TDRS
Wind
Unwind
Keyhole
@ RF limit Az
@ RF limit El
@ limit Az
@ limit El

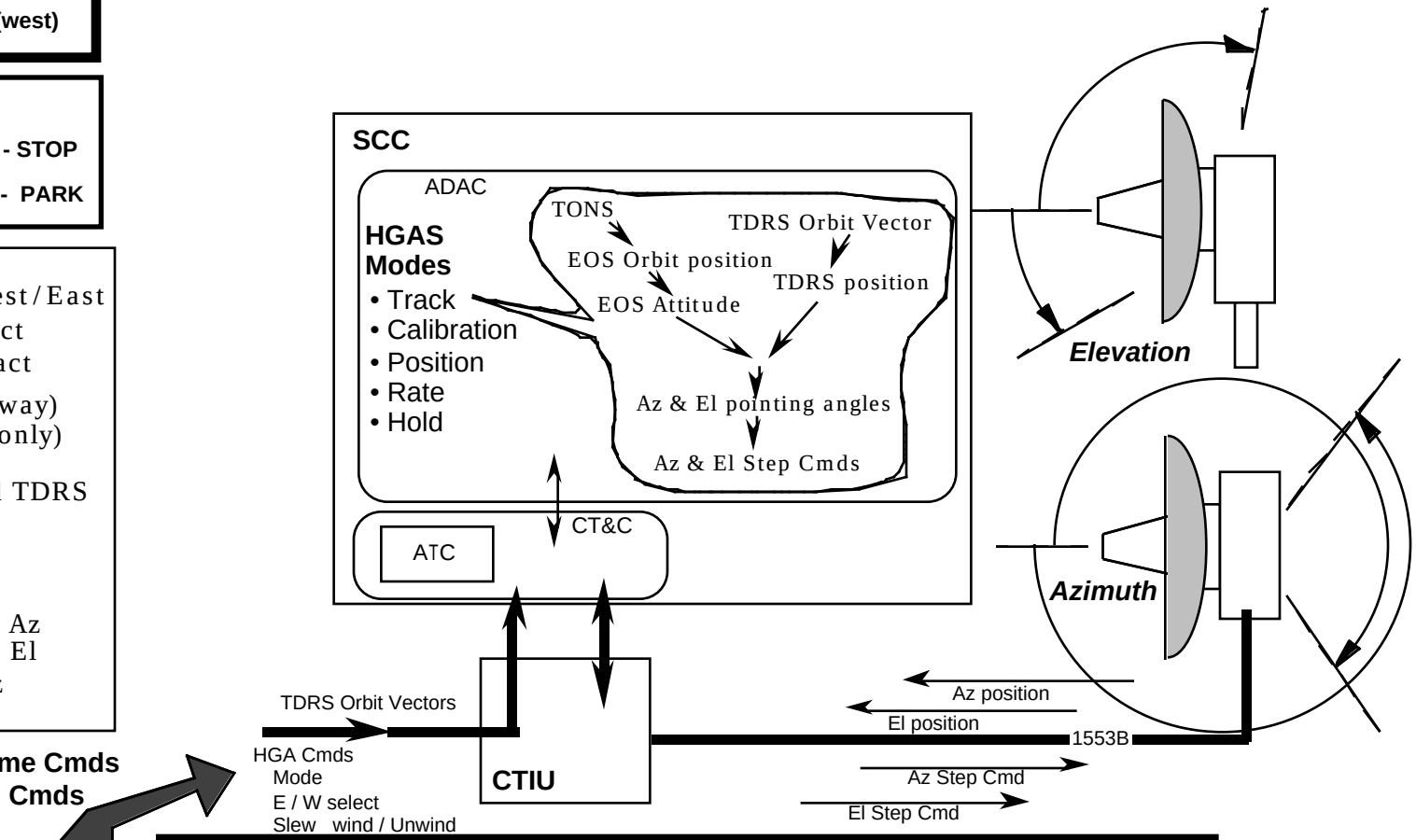

Real time Cmds
Stored Cmds

EOC

High Gain Antenna Pointing controlled by ADAC FSW
Flight Operations via realtime / stored commands to FSW

TDRS On-board Navigation System
OPERATION

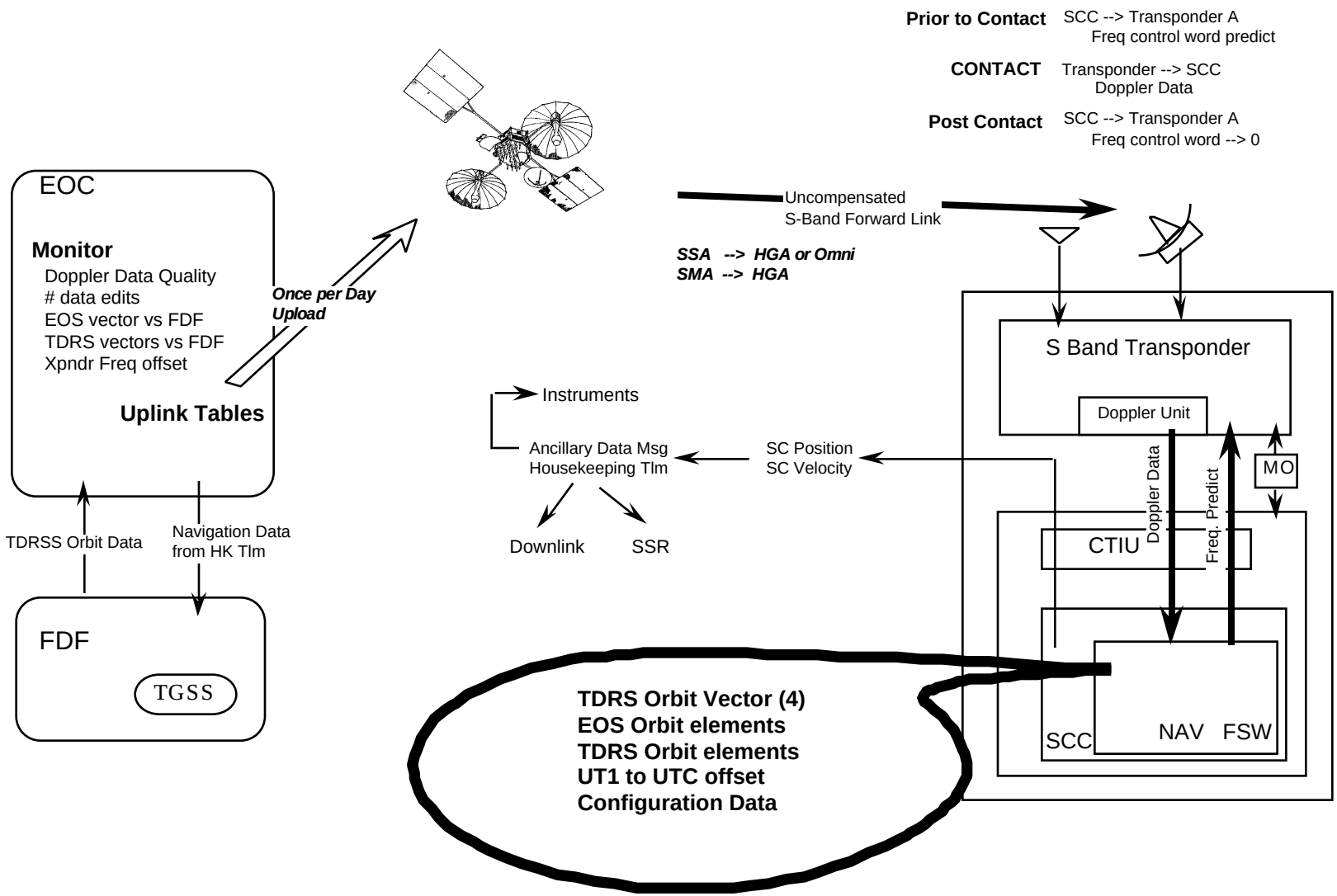

Orbit Adjust (Delta V) Sequence

Advanced Planning

Preliminary Maneuver Plan
Orbit Adjust scheduled (Inst notified) — OA - 7 to 30 days

Final Maneuver Plan
Support requests for maneuver (TDRSS, FDF) — OA-1 to 14 days

SSA Service

SMA Service

SSA Service

SMA Service

Stored command load to support Orbit maneuver
Inst cmd sequences to Orb Adj config

SC in Orbit Adj Mode

Thruster / Heaters ENABLE

Drag makeup Burn

Thrusters ARM
Thruster FIRE
Thrusters OFF
Thrusters DISARM

OA Day

Thruster Heaters DISABLE

SC in Standby Mode

TONS convergence, re-establish nav accuracy
within one orbit, subject to TDRSS contacts after maneuver

ADAC convergence, re-establish pointing accuracy
~ one orbit, subject to ADAC filter convergence

Instrument cmd sequences to full operation

SC in Science Mode

Drag Make up Maneuver

Maintain ± 20 km ground track accuracy

Max. Every 7 Days
Nom. Every ~ 30 days
Min Every 6 months

Dependent on Solar Flux

Cross Track Maneuver

Maintain Sun-Sync Orbit 10:30 AM ±15 min decending node

Once per Mission

Dependent on launch placement of inclination and launch node

(Inclination correction requires 90 degree yaw maneuver and is significantly more complex than the drag make up sequence shown)